Quiz 04: Chapter 04

Examine the solved problem below. There are five errors in the solution below. Your task is to locate and identify those errors, then correct them and calculate the proper result. Each correctly identified error is worth 3 points, and the re-calculated result is worth 5 points as well. You must save your work in pdf format and submit via the Quiz 04 Assignment in the Quizzes folder of the Online Classroom in Blackboard. Please do not use any other file format than pdf (unless you submit an edited MS Word .docx file).

The angle bracket shown is free to rotate about O. Determine the moment about the origin M_O if forces $F_1 = 60\text{lb}$, $F_2 = 40\text{lb}$, and $F_3 = 50\text{lb}$ are applied as shown. The angle $\theta = 90°$.

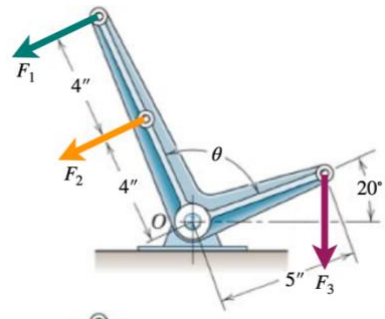

A) Sketch the displacement vectors $\vec{r_1}$, $\vec{r_2}$, and $\vec{r_3}$.
The magnitudes of the displacements are:

$$r_1 = 4\text{in}$$
$$r_2 = 8\text{in}$$
$$r_3 = \frac{(5\text{in})}{\cos 20°} = 5.32\text{in}$$

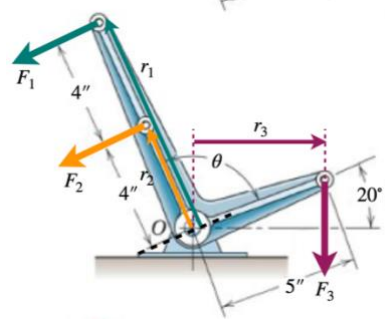

B) Calculate the moment M_1 due to the force $F_1 = 60\text{lb}$.
Let counter-clockwise be the positive direction:

$$M_1 = r_1 F_1 = (0.25\text{ft})(60\text{lb}) = +15\text{ft} \cdot \text{lb}$$

C) Calculate the moment M_2 due to the force $F_2 = 40\text{lb}$.
Let counter-clockwise be the positive direction:

$$M_2 = r_2 F_2 = (0.667\text{ft})(60\text{lb}) = +40\text{ft} \cdot \text{lb}$$

D) Calculate the moment M_3 due to the force $F_3 = 50\text{lb}$.
Let clockwise be the positive direction:

$$M_3 = r_3 F_3 = (0.443\text{ft})(50\text{lb}) = +22.2\text{ft} \cdot \text{lb}$$

E) Calculate $M_O = M_1 + M_2 + M_3$:

$$M_O = 15\text{ft} \cdot \text{lb} + 40\text{ft} \cdot \text{lb} + 22.2\text{ft} \cdot \text{lb} = 77.2\text{ft} \cdot \text{lb}$$